DRAGON BLOK

FIREHOUSE™

Fire Station
Caserne de pompiers

638 PCS

6+

⚠ **WARNING:**
CHOKING HAZARD — Small parts.
Not for children under 3 years.

⚠ **AVERTISSEMENT :**
RISQUE D'ÉTOUFFEMENT — Petites pièces.
Non conseillé aux enfants de moins de 3 ans.

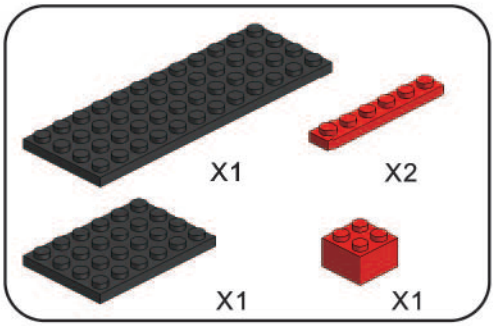

1

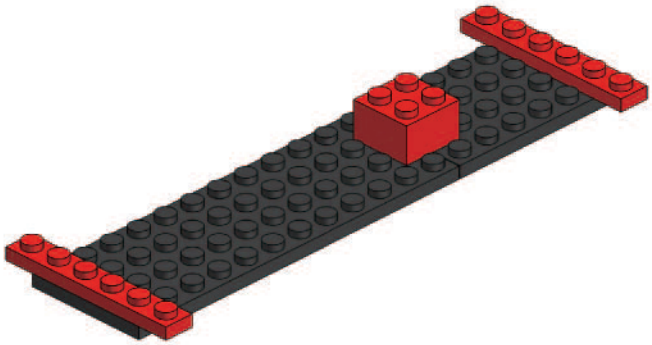

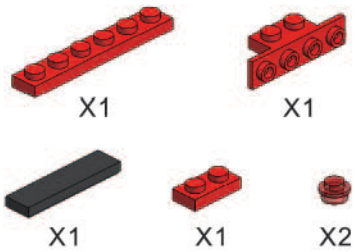

2

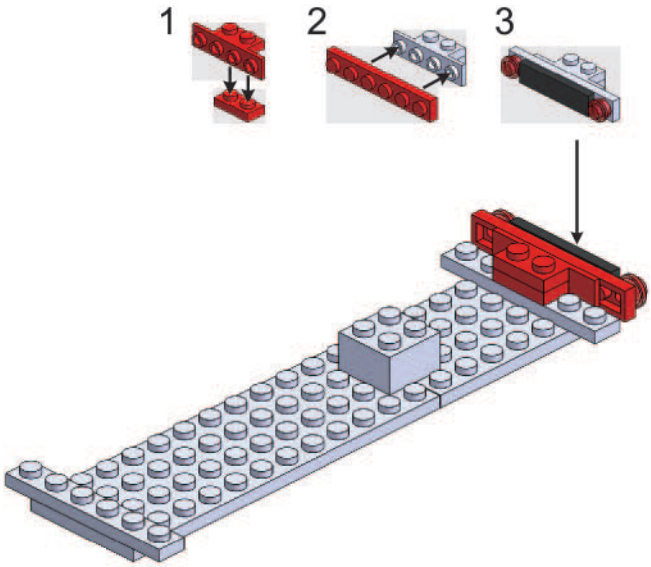

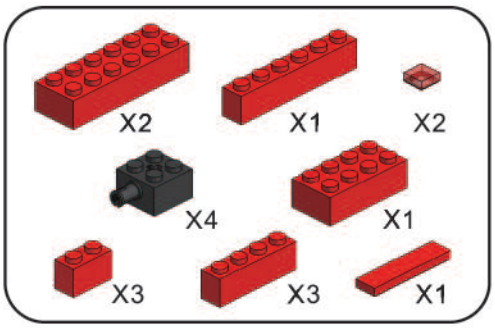

3

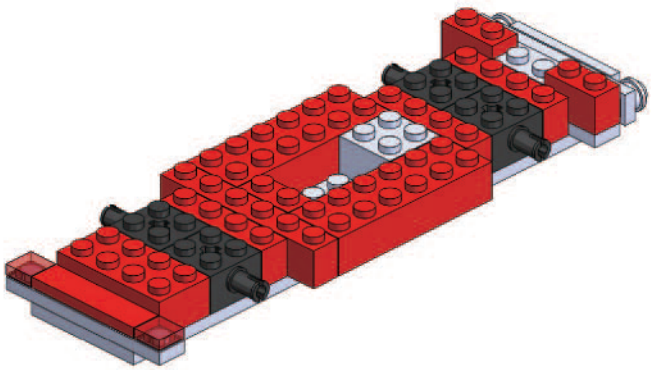

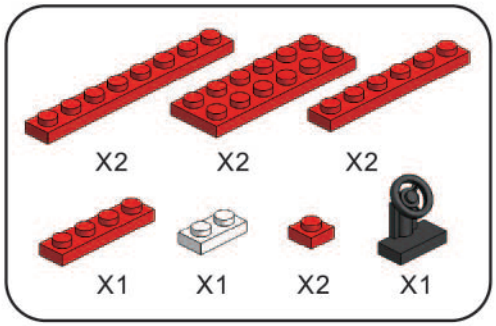
X2
X2
X2
X1
X1
X2
X1

4

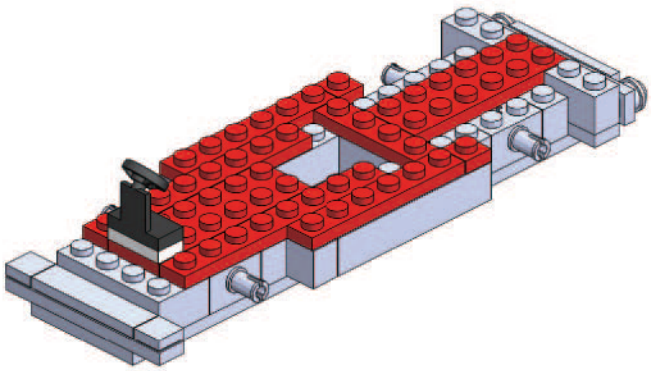

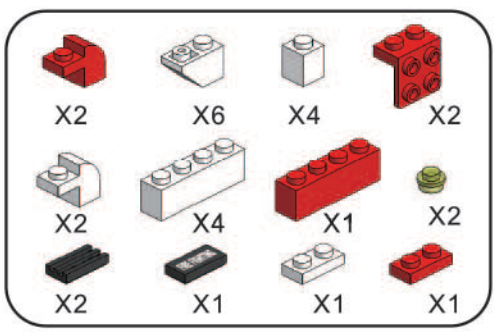
X2
X6
X4
X2
X2
X4
X1
X2
X2
X1
X1
X1

5

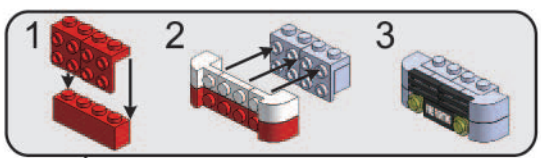
1
2
3

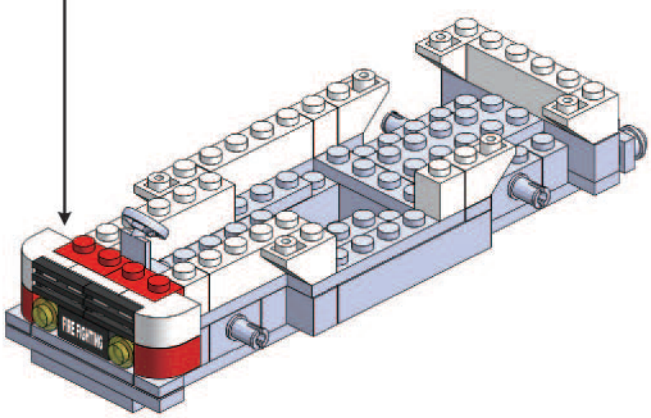
FIRE FIGHTING

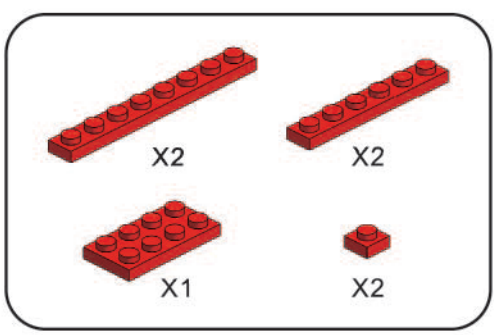
X2
X2
X1
X2

6

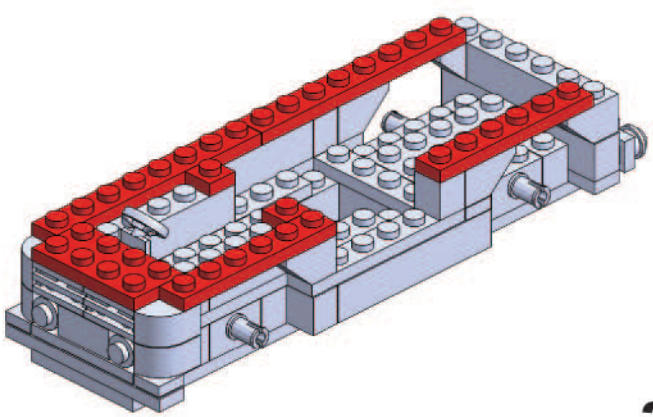

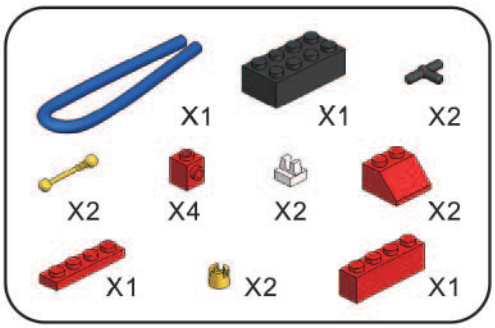
X1
X1
X2
X2
X4
X2
X2
X1
X2
X1

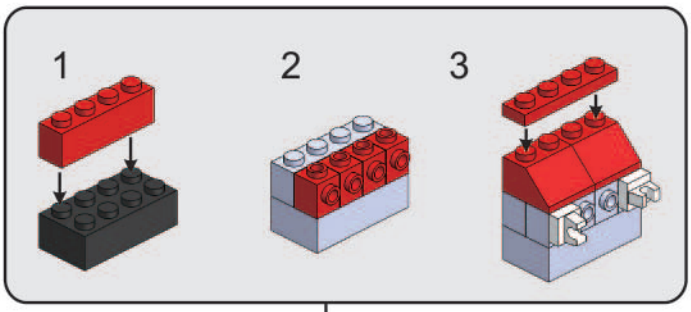
1
2
3

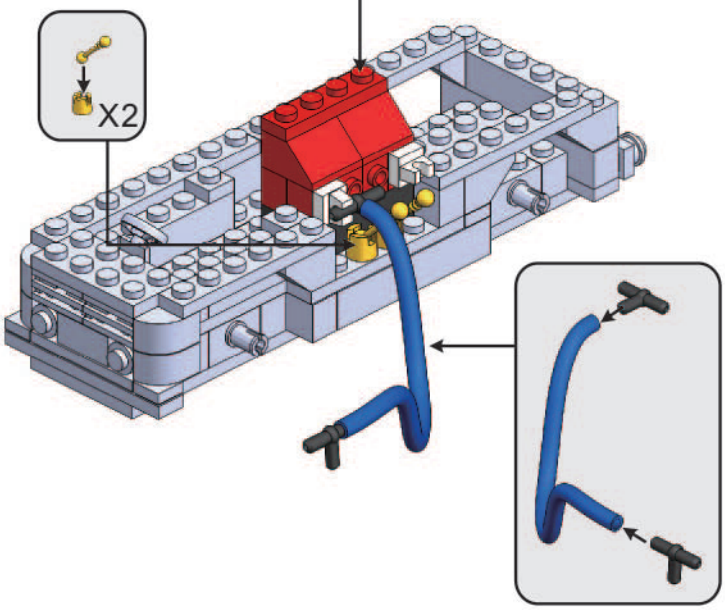
X2

7

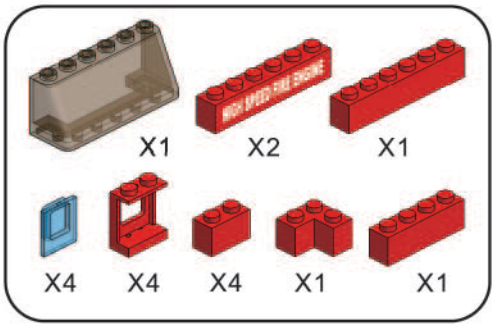
X1
X2
X1
X4
X4
X4
X1
X1

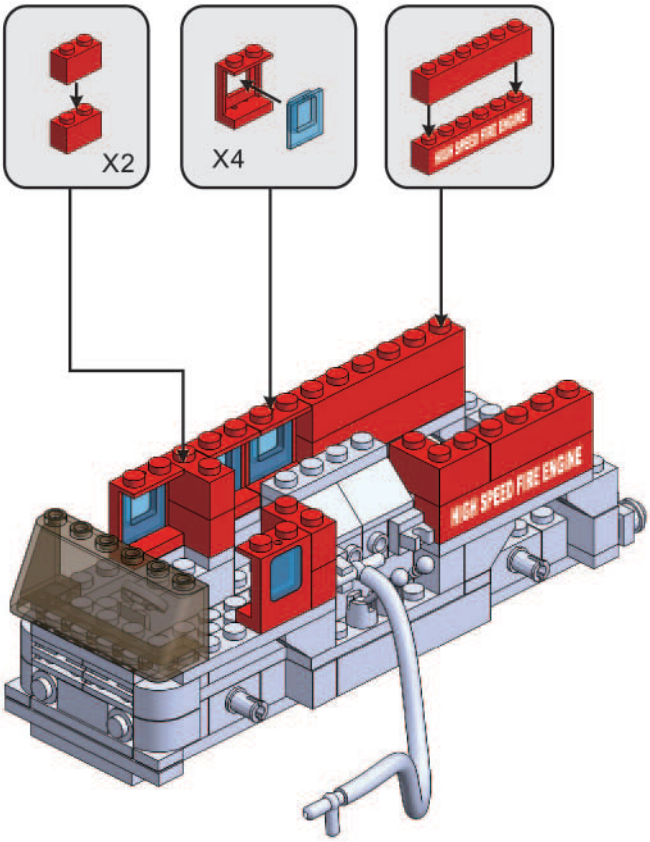
X2
X4
HIGH SPEED FIRE ENGINE

8

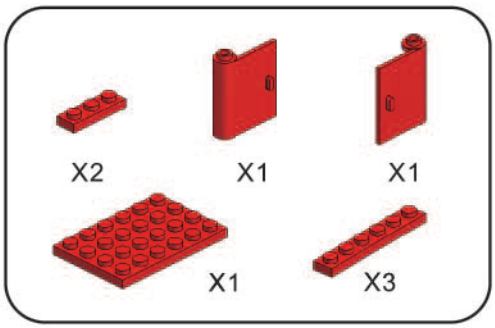

9

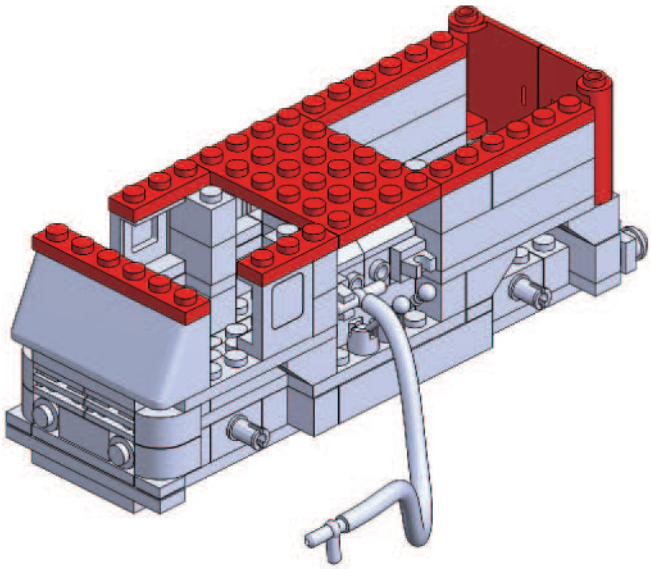

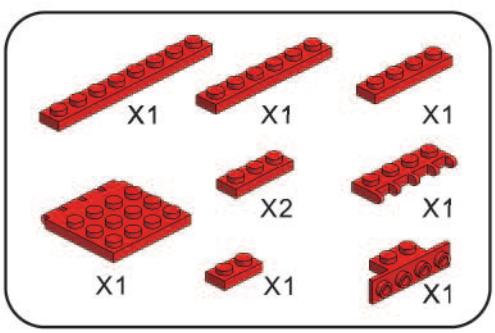

10

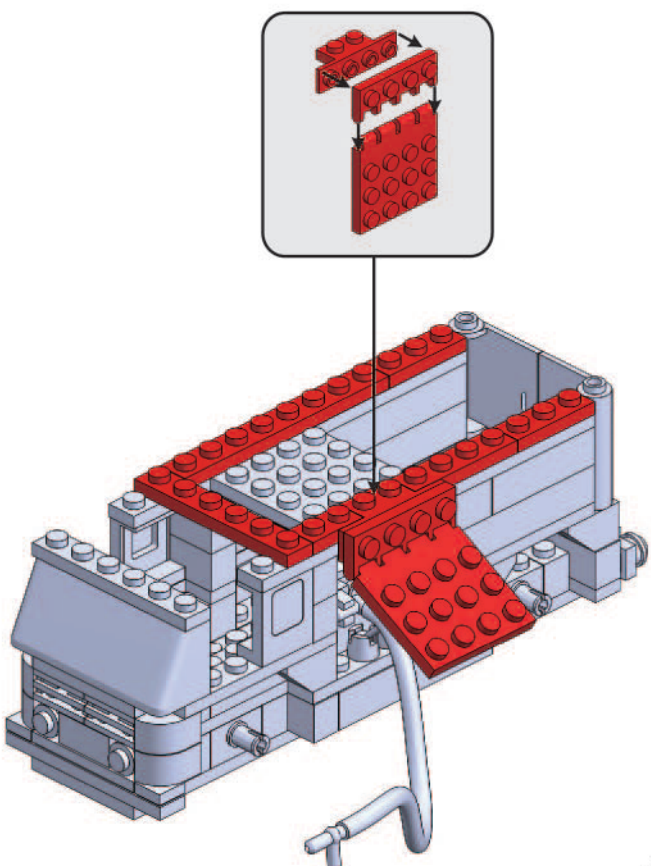

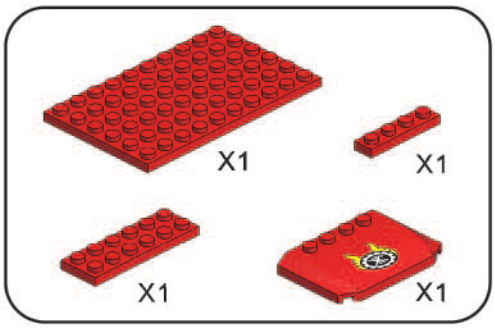

11

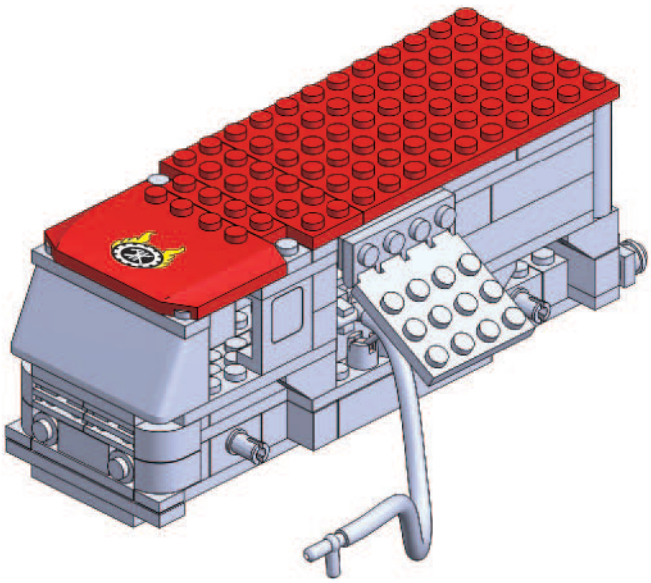

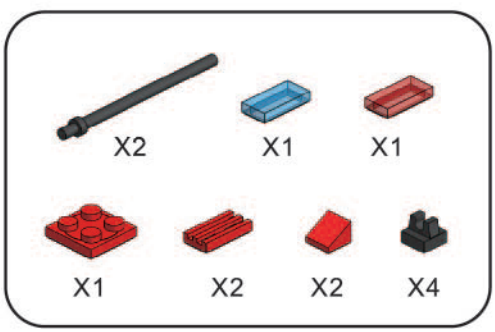

12

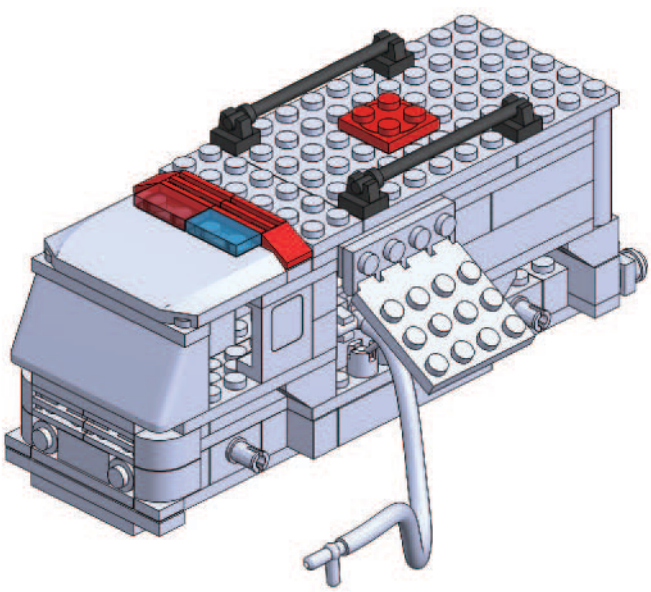

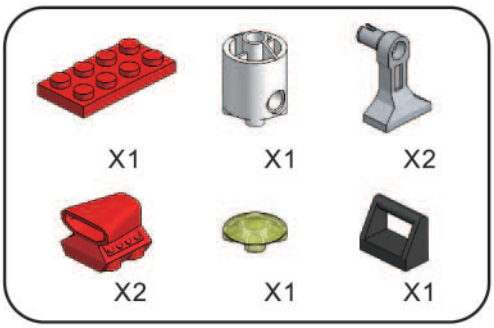

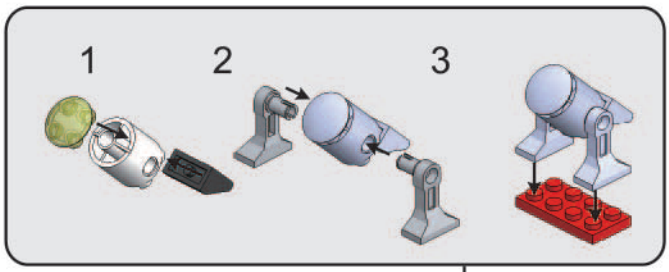

13

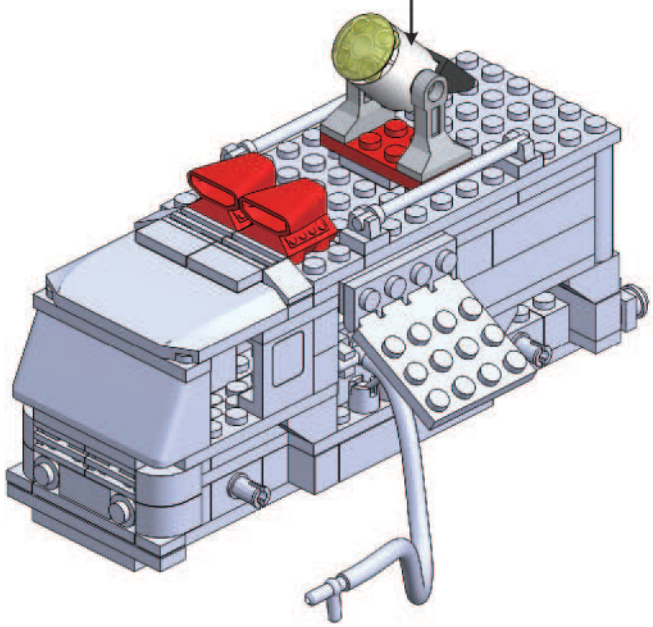

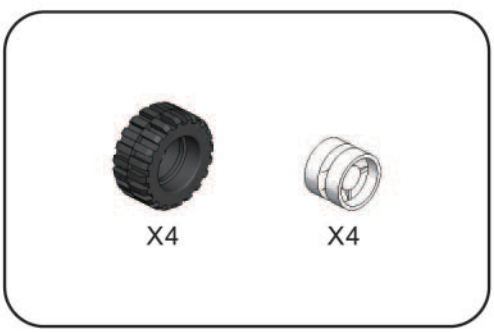

14

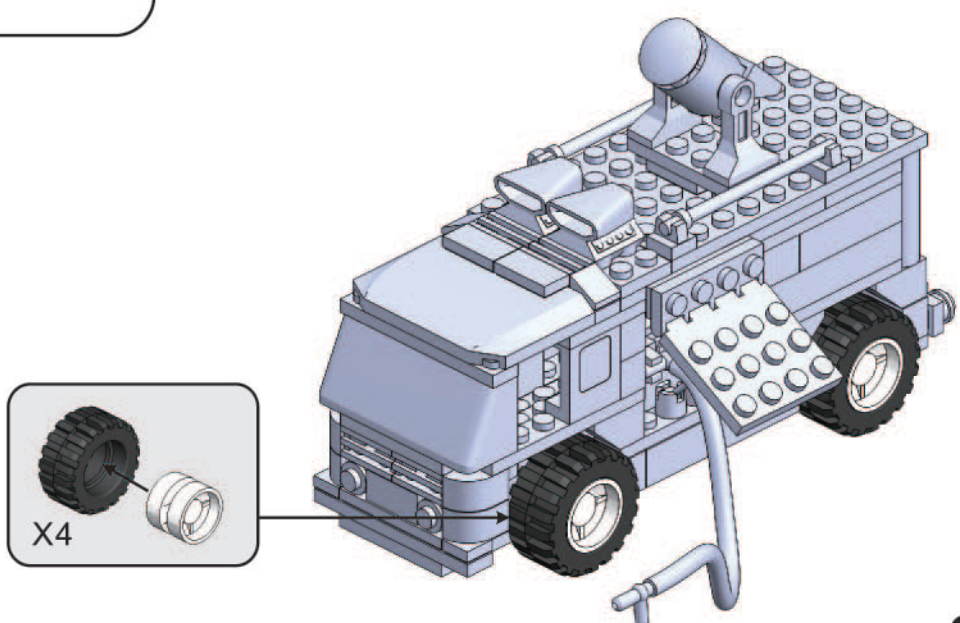

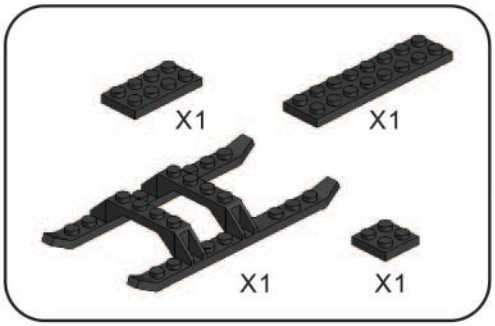
X1
X1
X1
X1

1

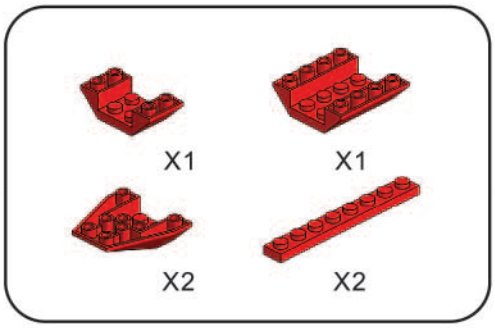
X1
X1
X2
X2

2

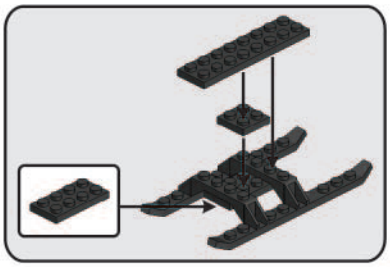

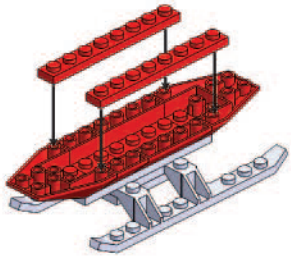

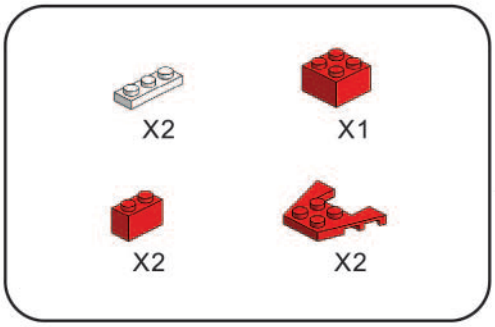
X2
X1
X2
X2

3

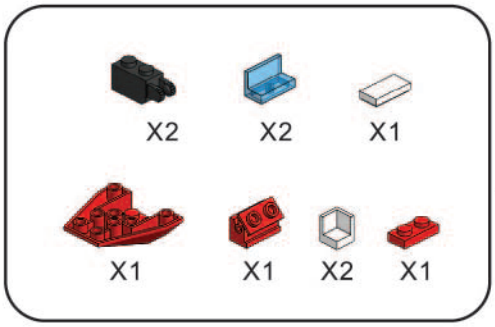
X2
X2
X1
X1
X1
X2
X1

4

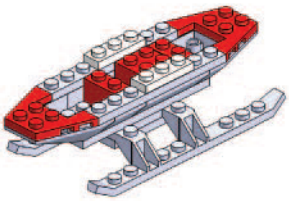

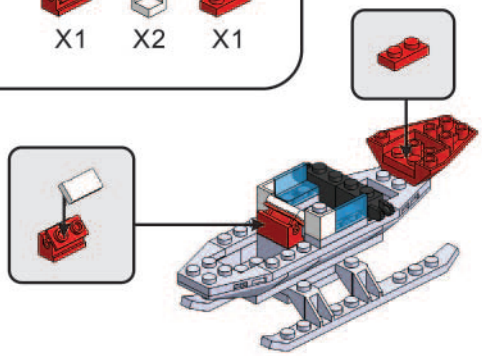

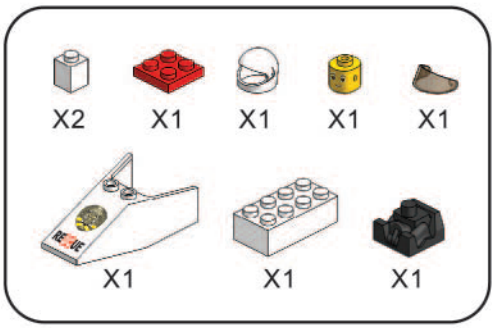
X2
X1
X1
X1
X1
X1
X1
X1

5

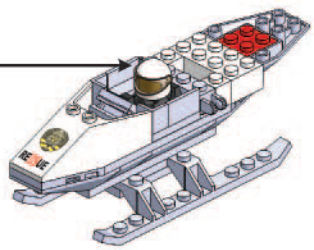

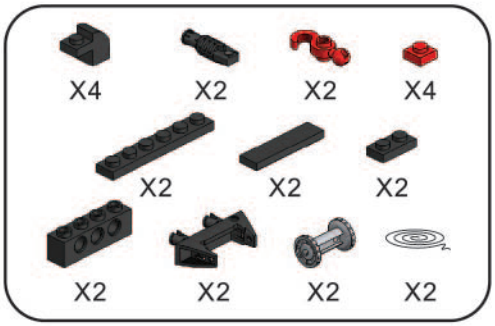
X4
X2
X2
X4
X2
X2
X2
X2
X2
X2
X2

6

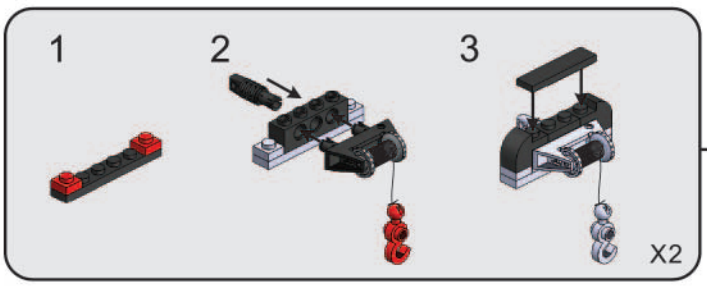
1
2
3
X2

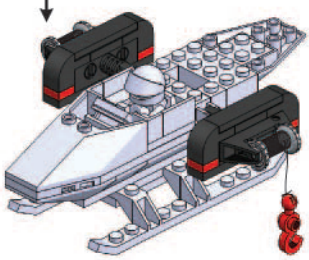

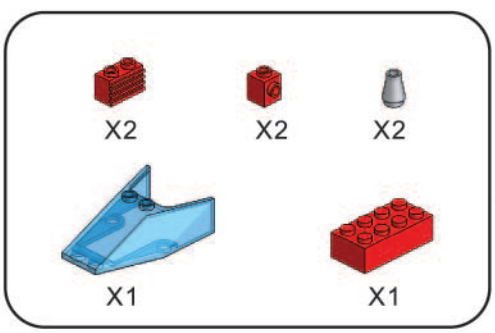
X2
X2
X2
X1
X1

7

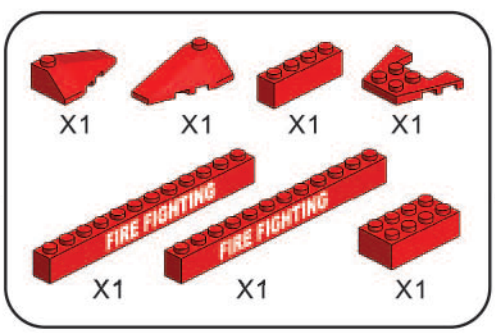
X1
X1
X1
X1
FIRE FIGHTING
FIRE FIGHTING
X1
X1
X1

8

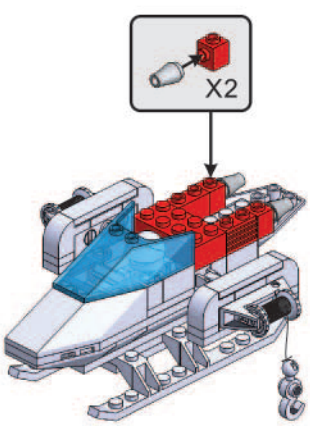
X2

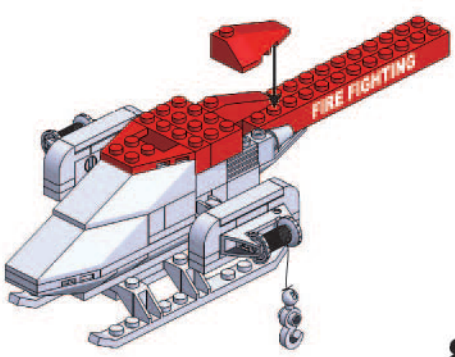
FIRE FIGHTING

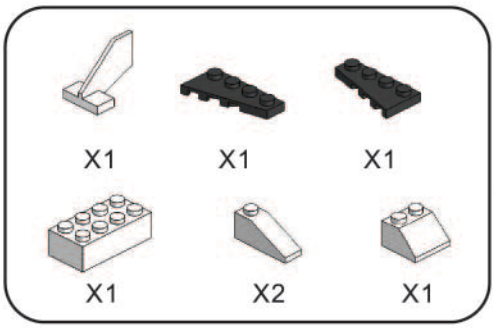
X1
X1
X1
X1
X2
X1

9

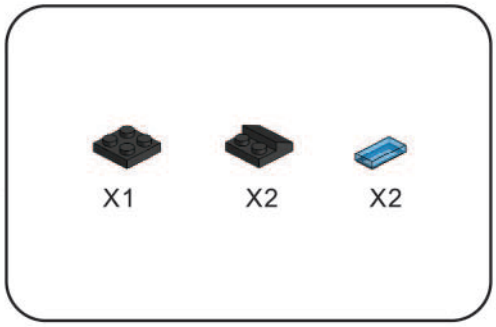
X1
X2
X2

10

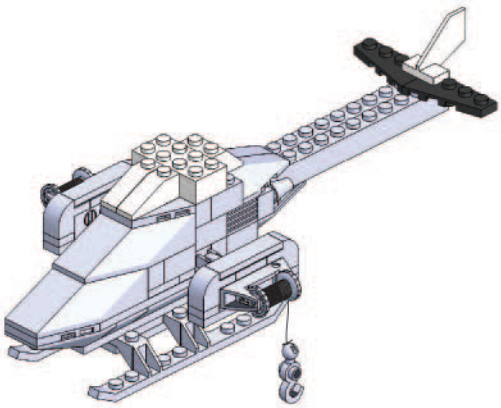

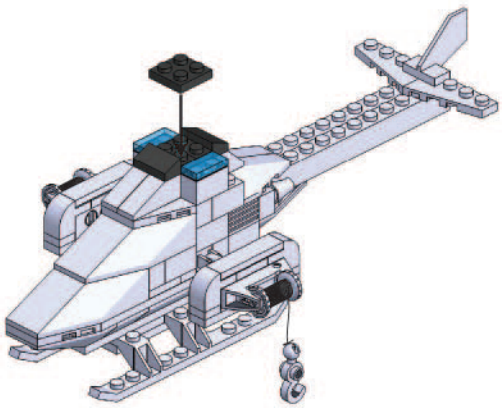

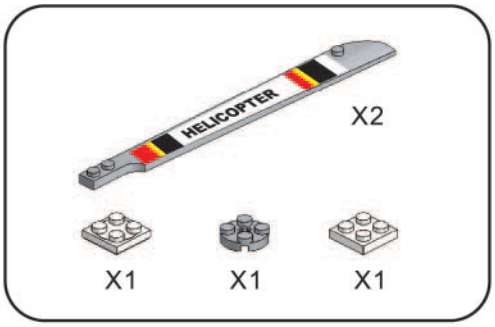
HELICOPTER
X2
X1
X1
X1

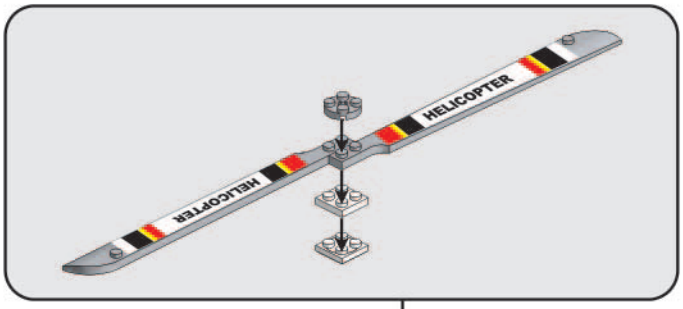
HELICOPTER
HELICOPTER

11

HELICOPTER
HELICOPTER
FIRE FIGHTING

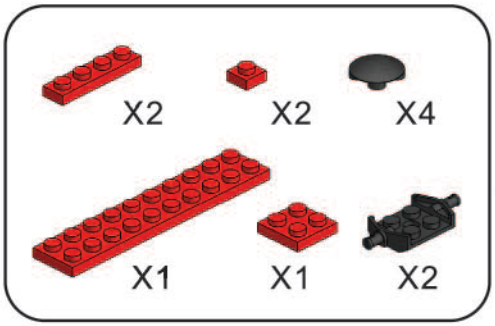

1

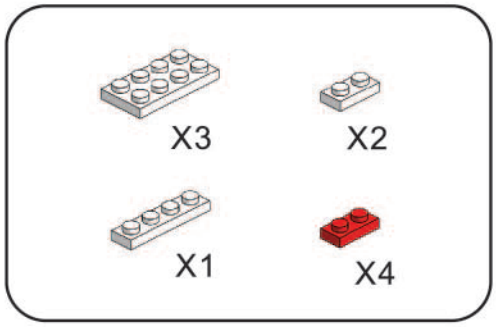

2

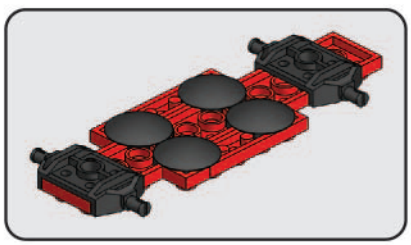

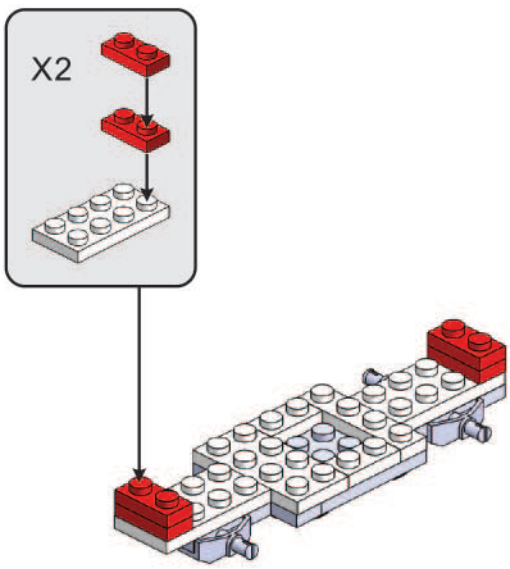

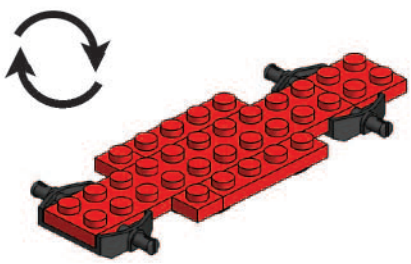

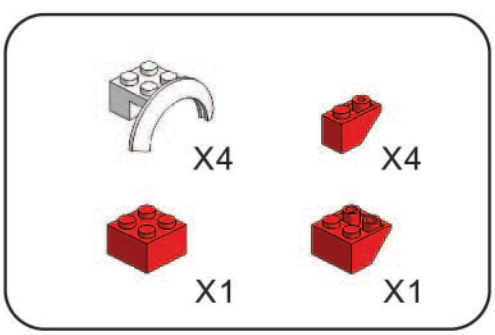

3

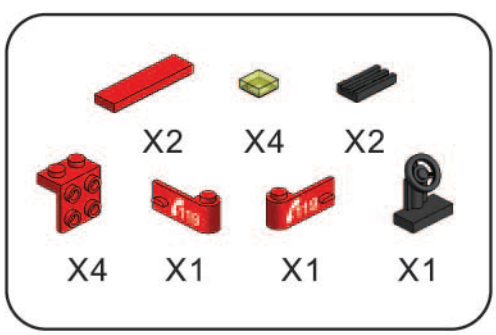

4

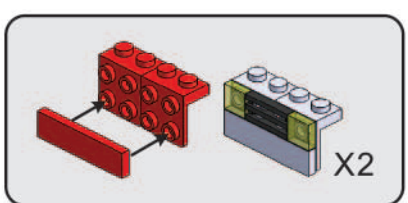

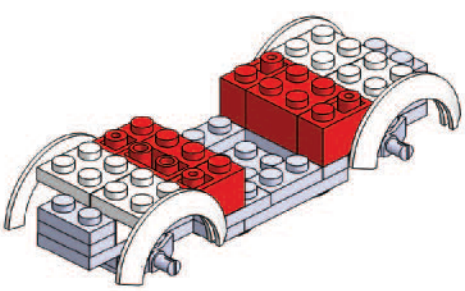

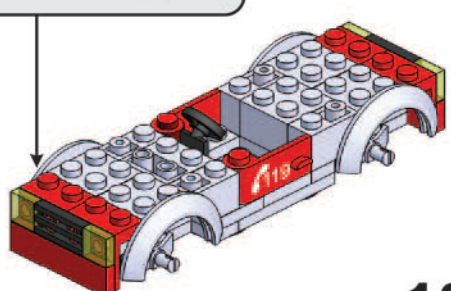

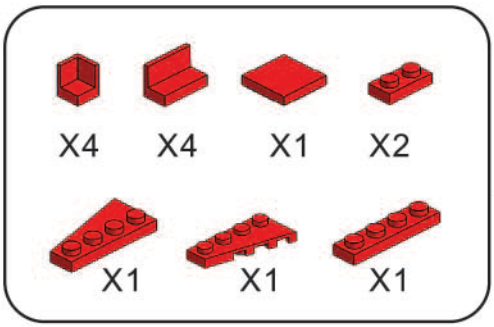

5

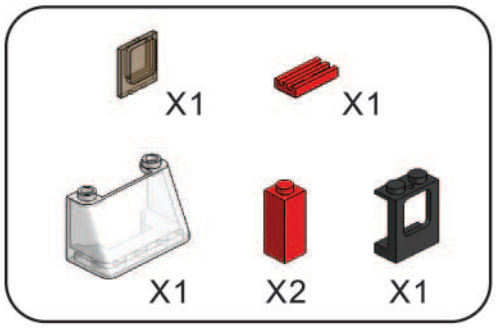

6

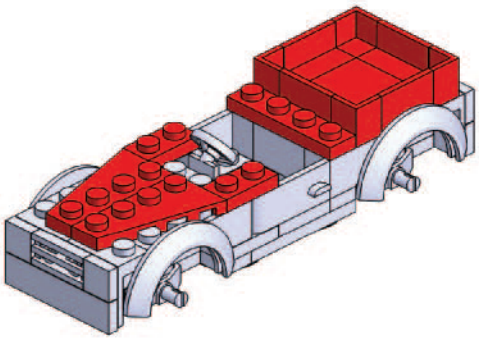

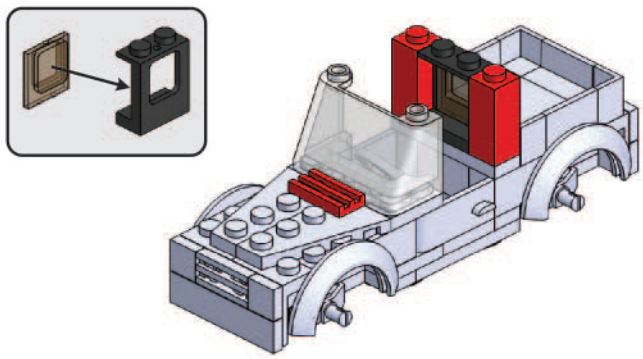

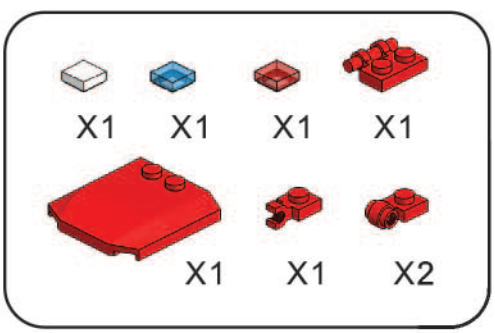

7

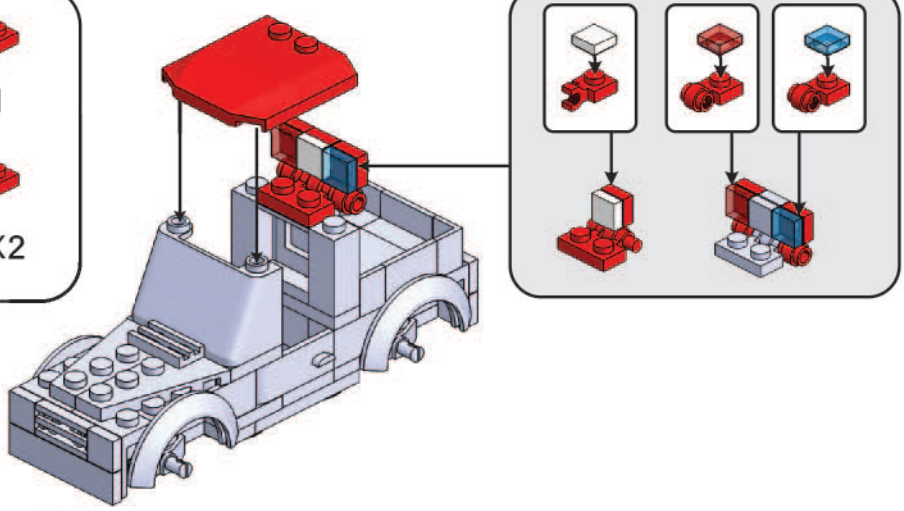

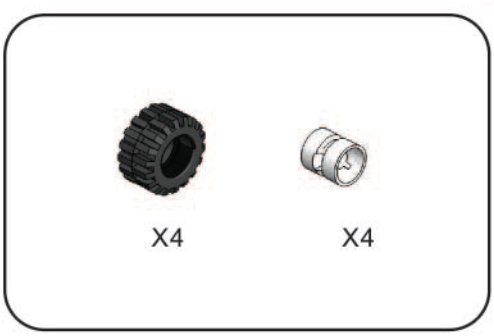

8

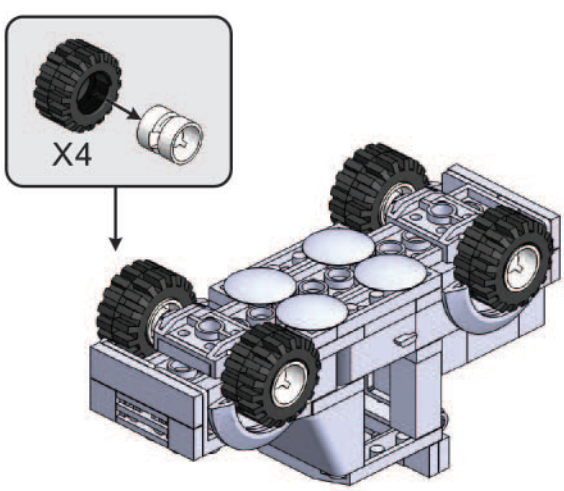

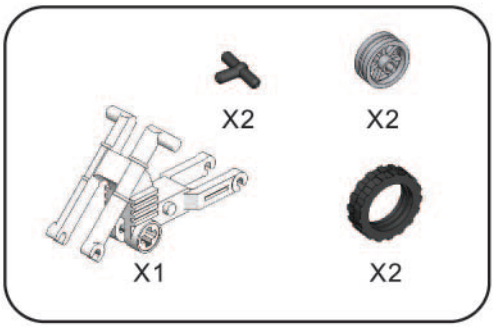

1

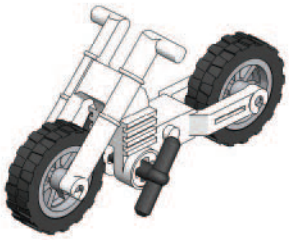

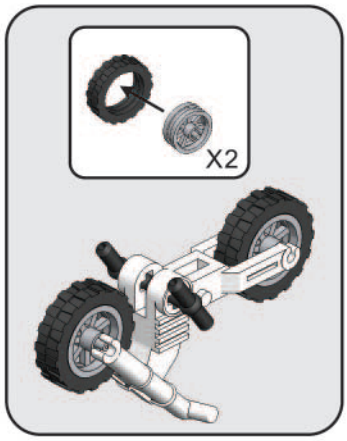

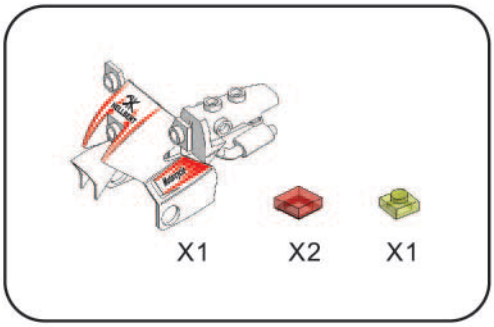

2

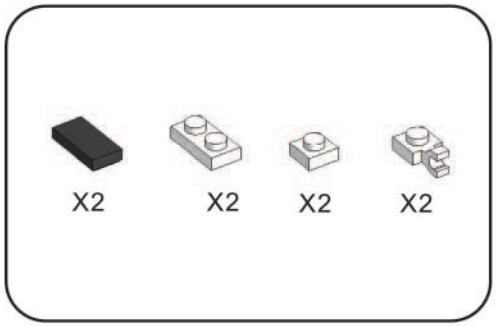

3

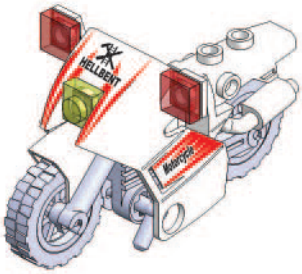

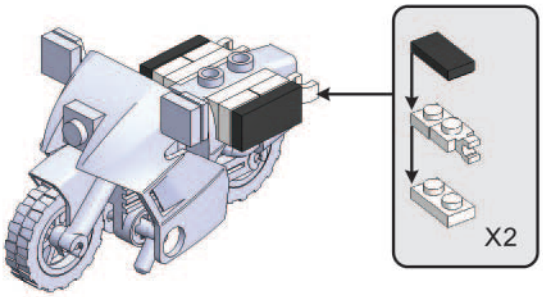

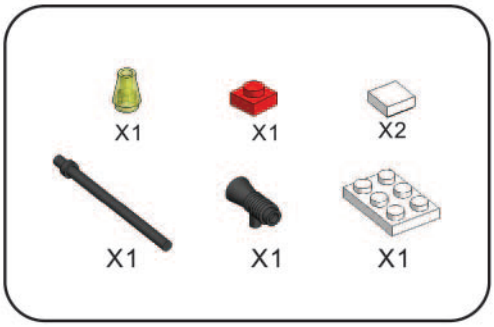

4

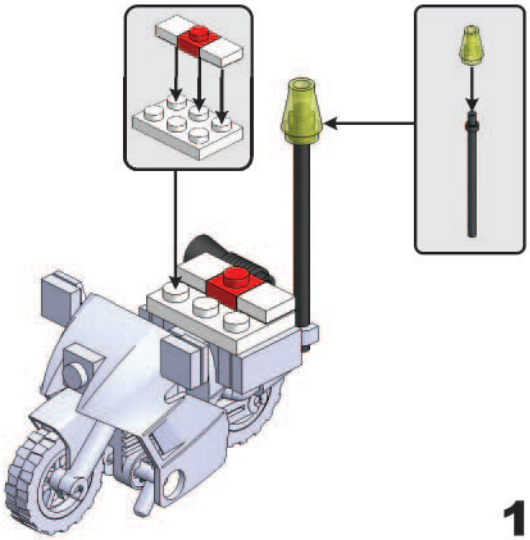

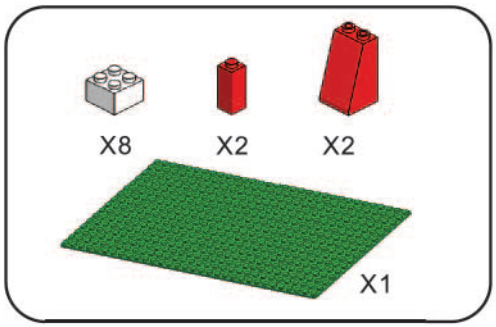

1

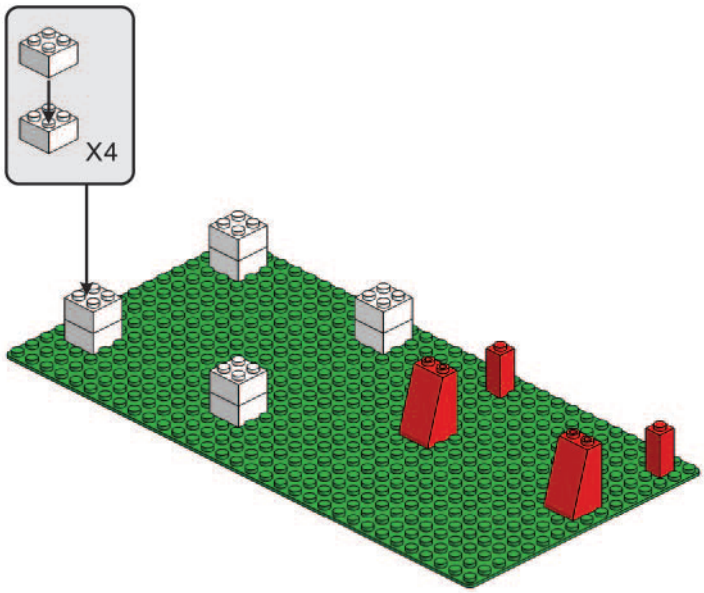

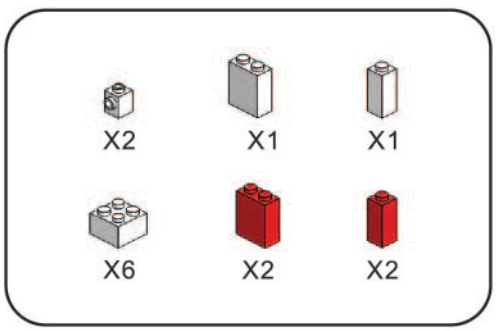

2

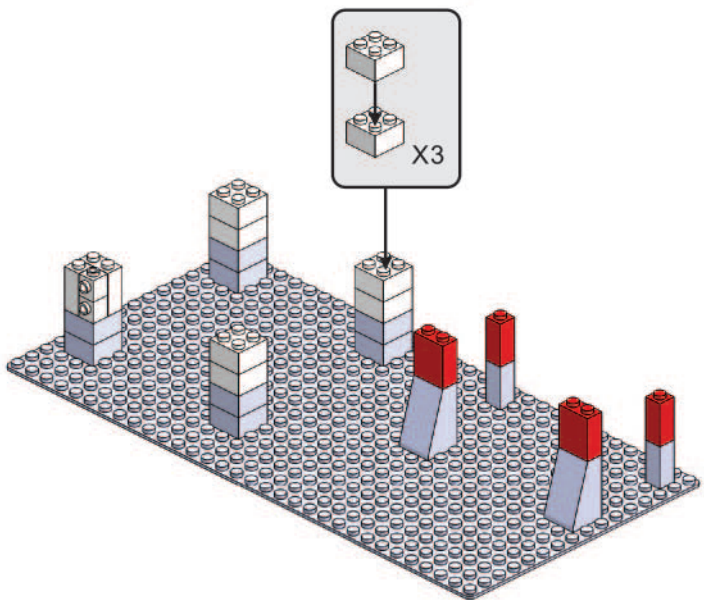

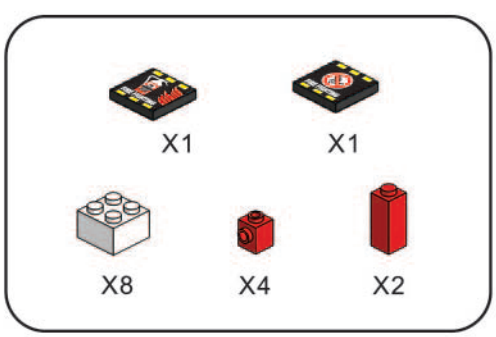

3

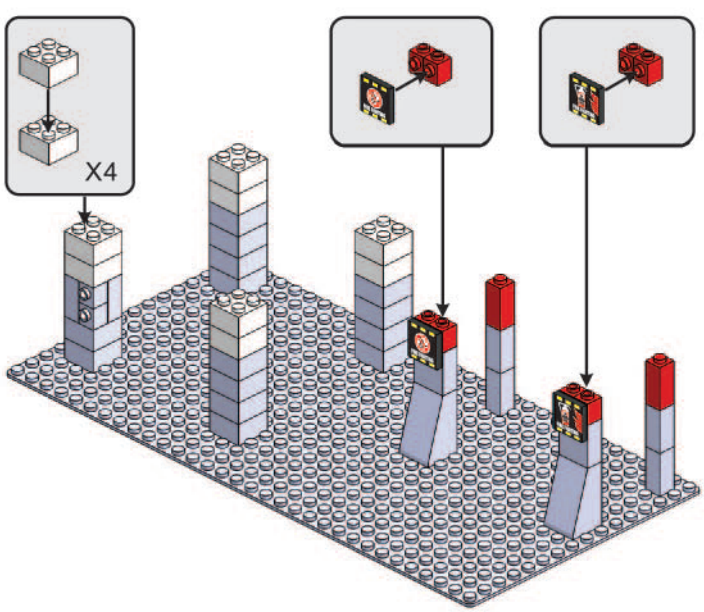

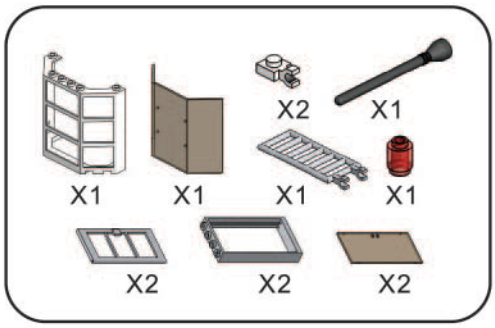

4

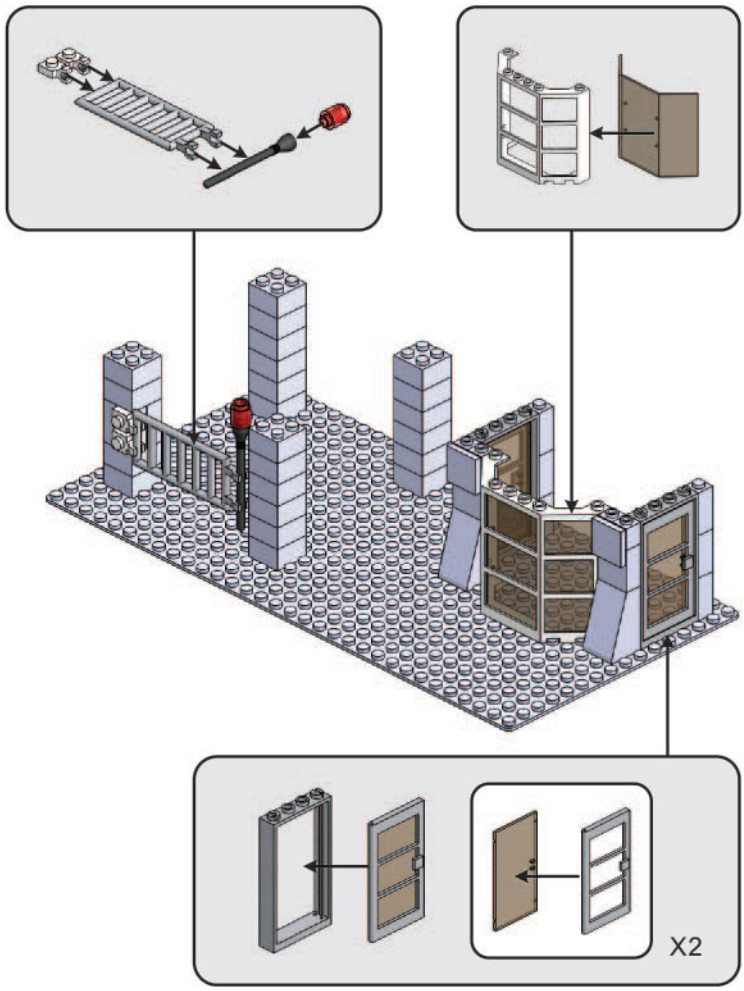

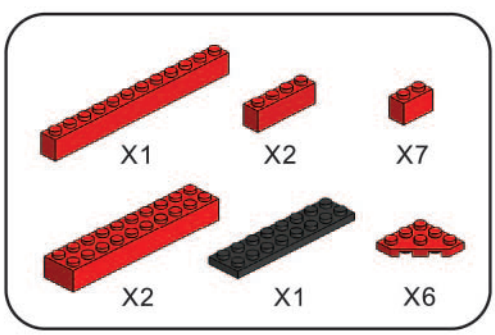

5

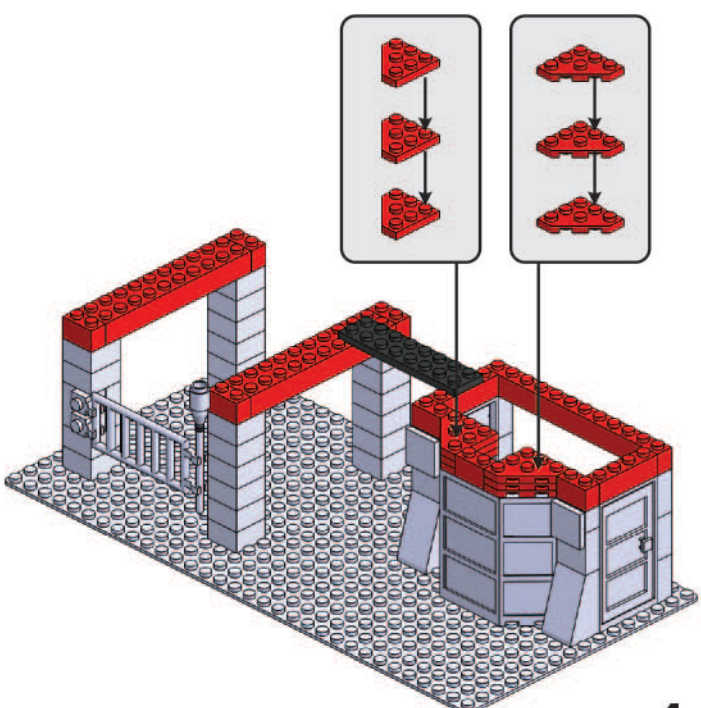

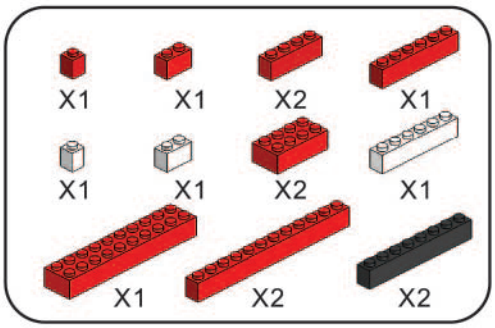

6

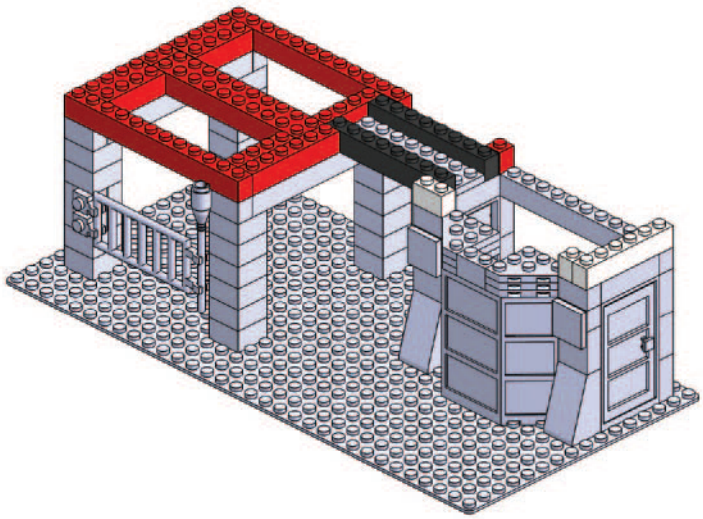

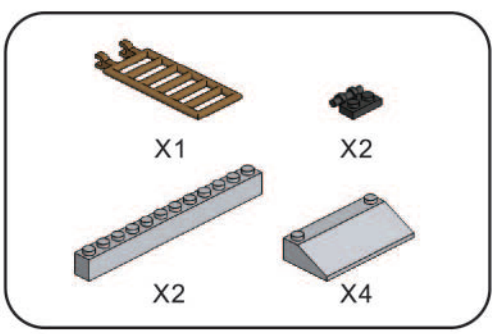

7

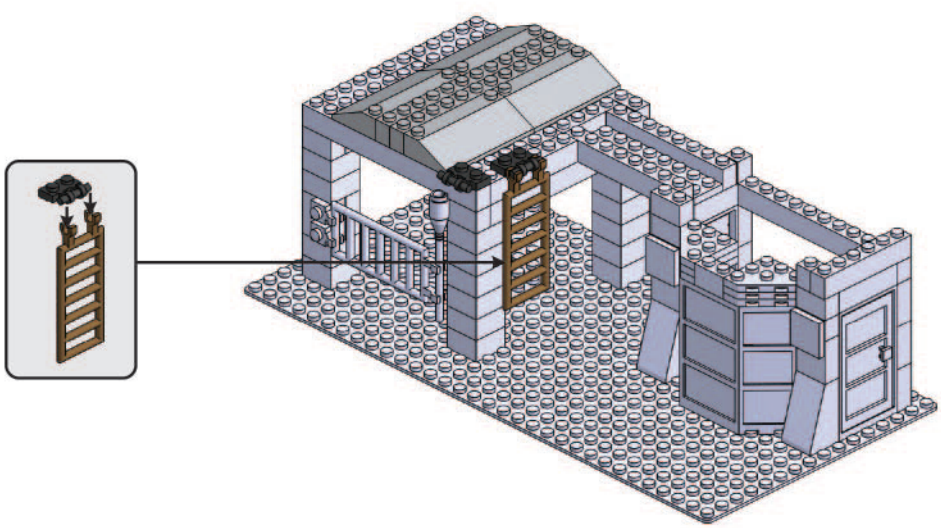

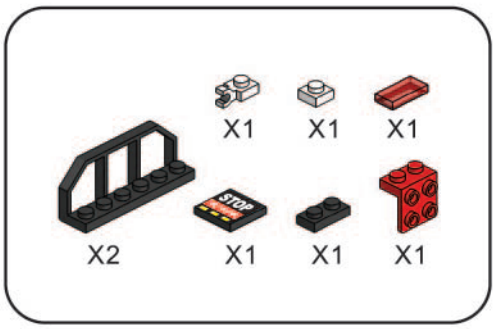

8

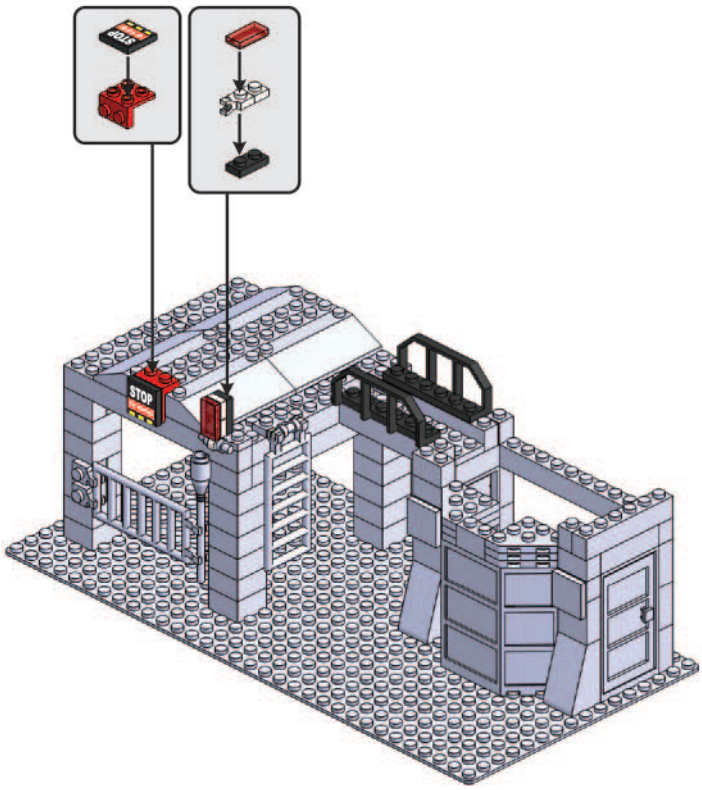

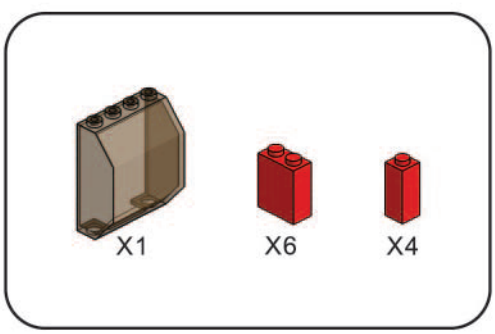

9

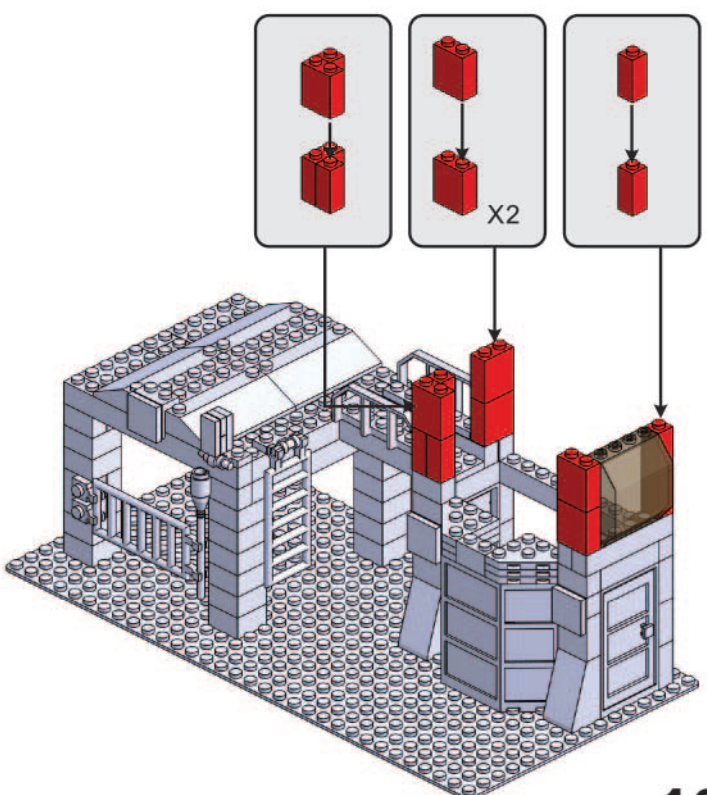

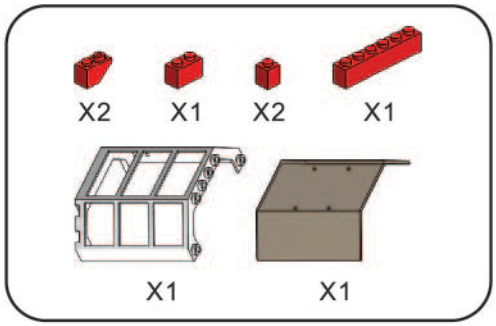

10

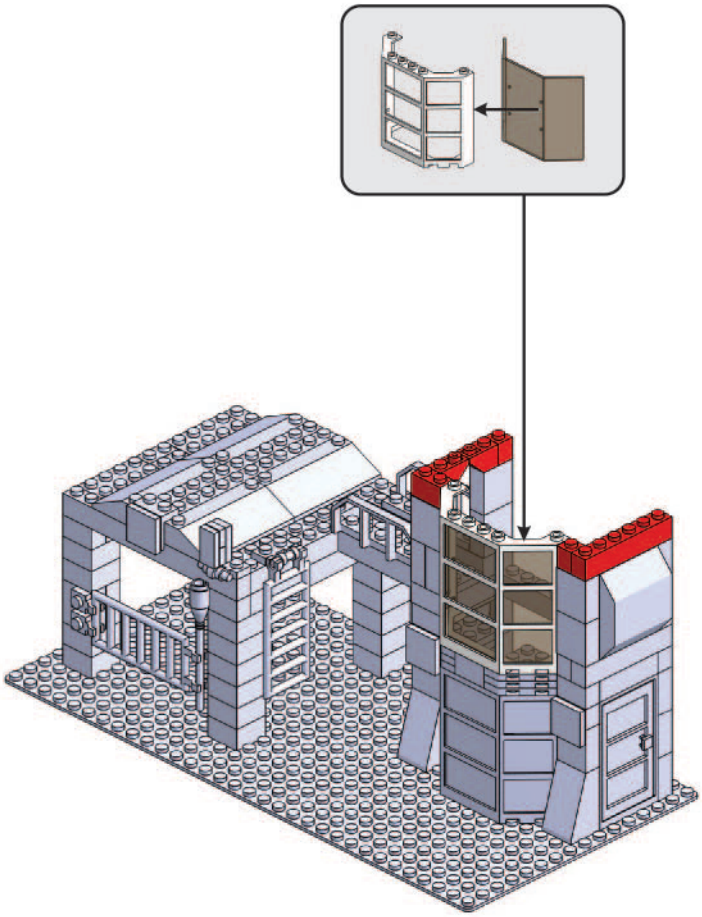

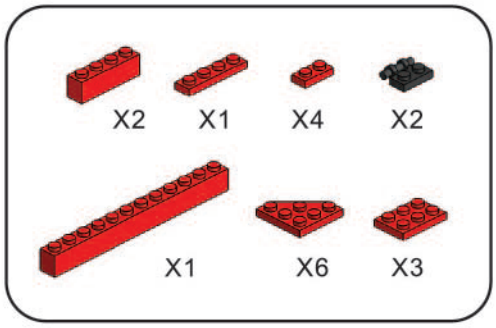

11

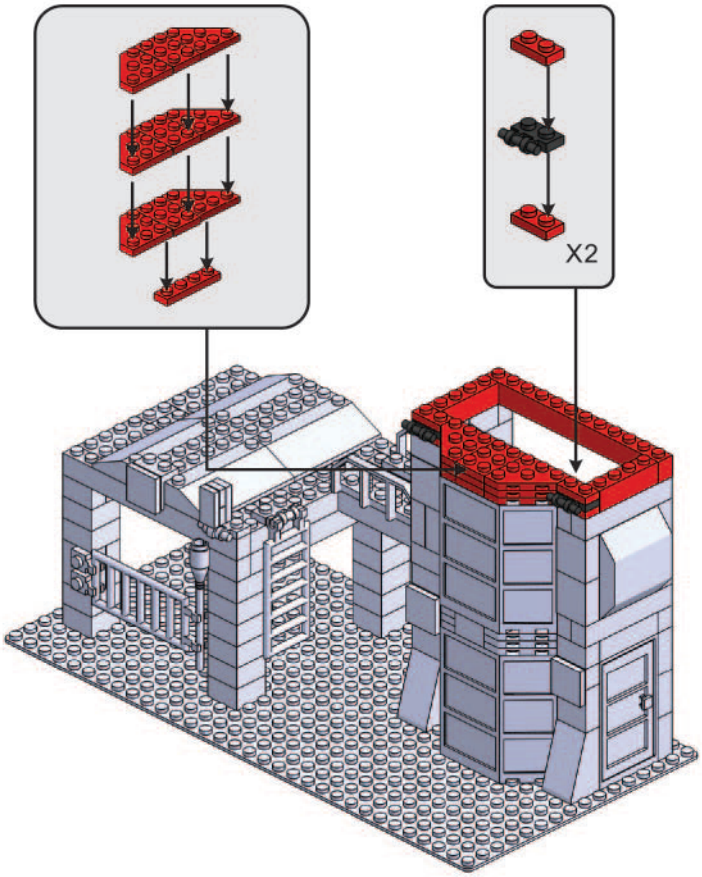

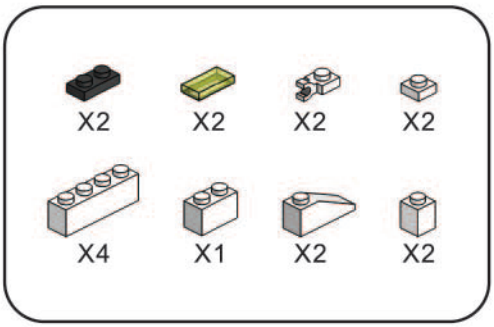
X2
X2
X2
X2
X4
X1
X2
X2

12

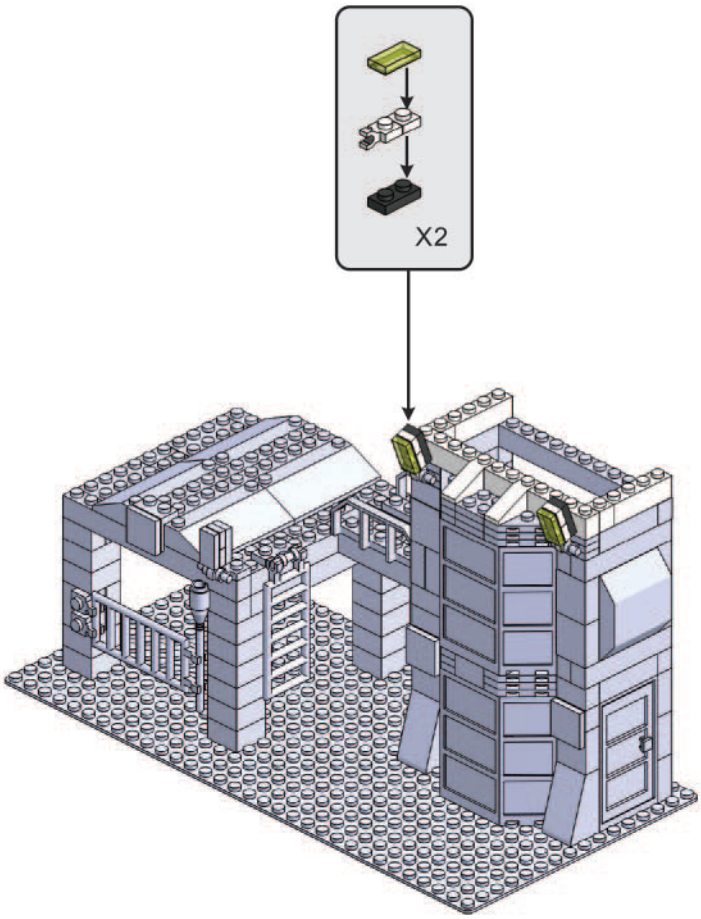
X2

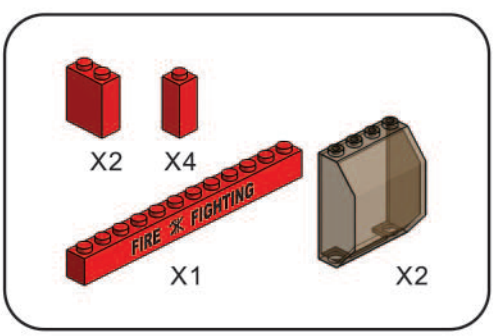
X2
X4
FIRE FIGHTING
X1
X2

13

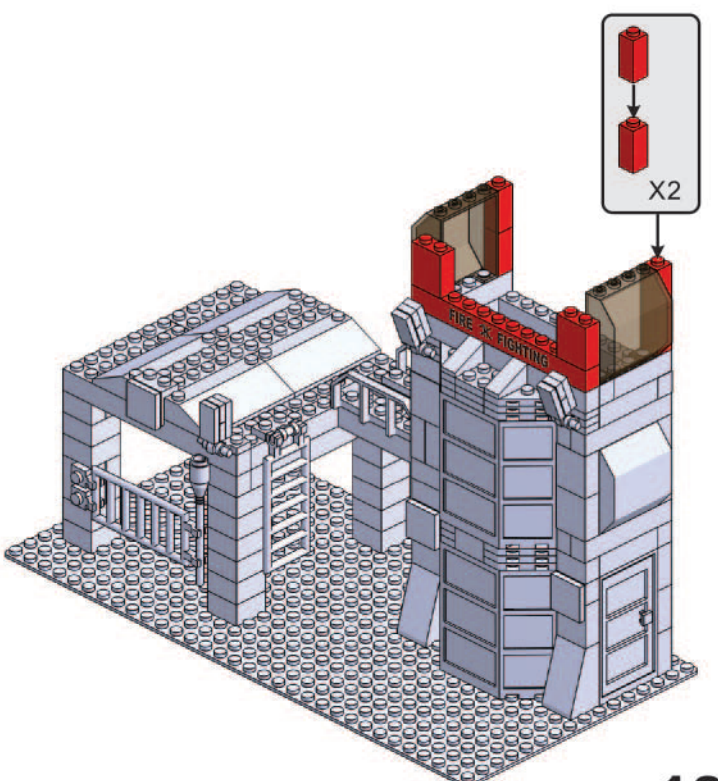
X2
FIRE FIGHTING

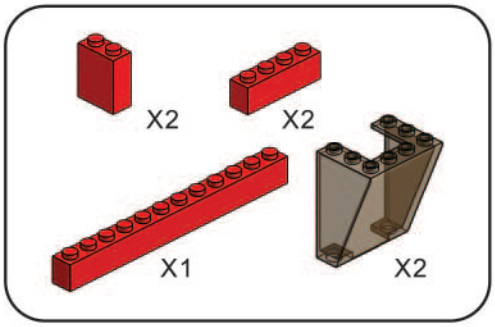

14

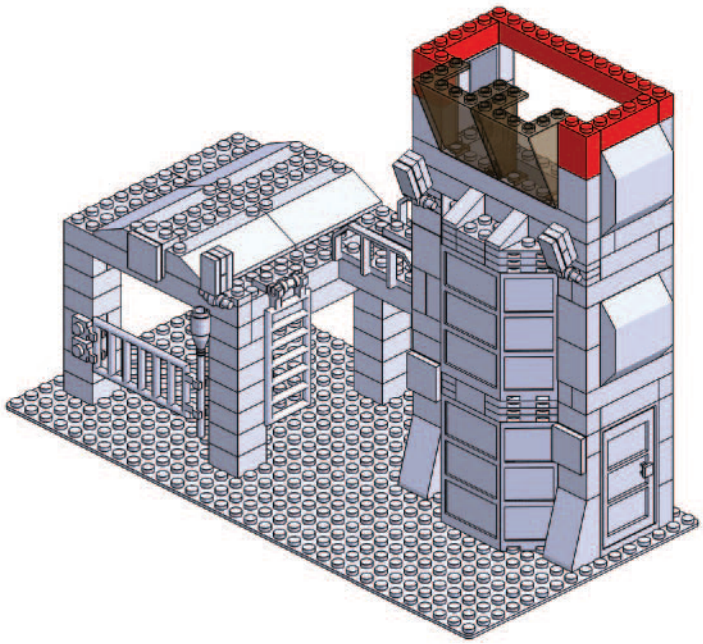

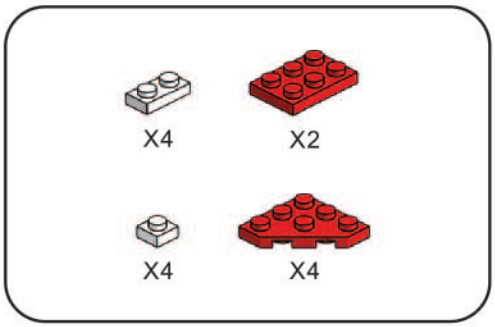

15

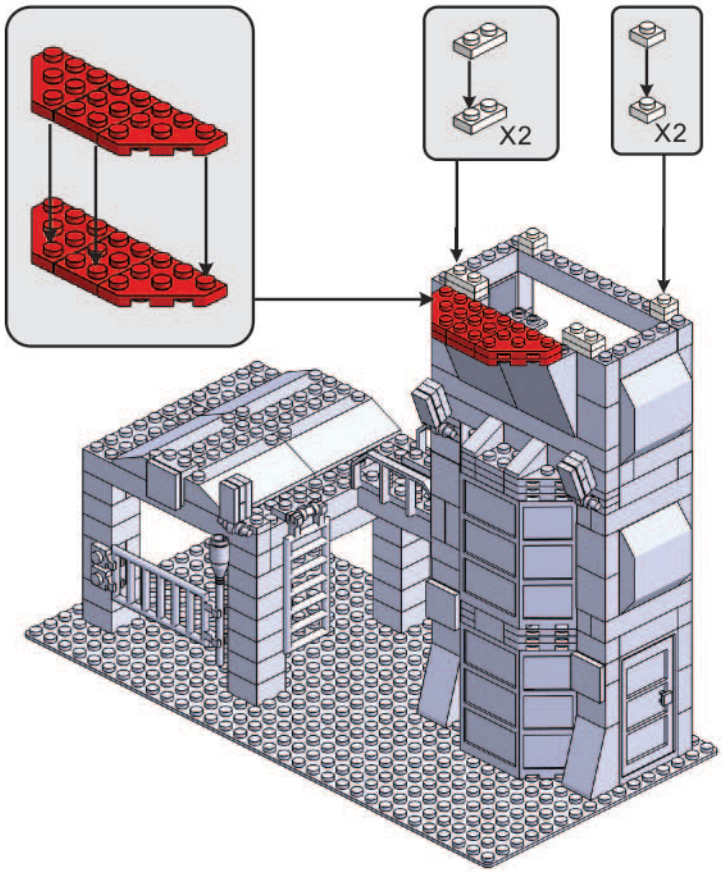

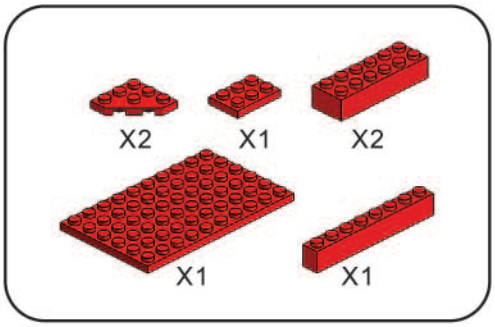

16

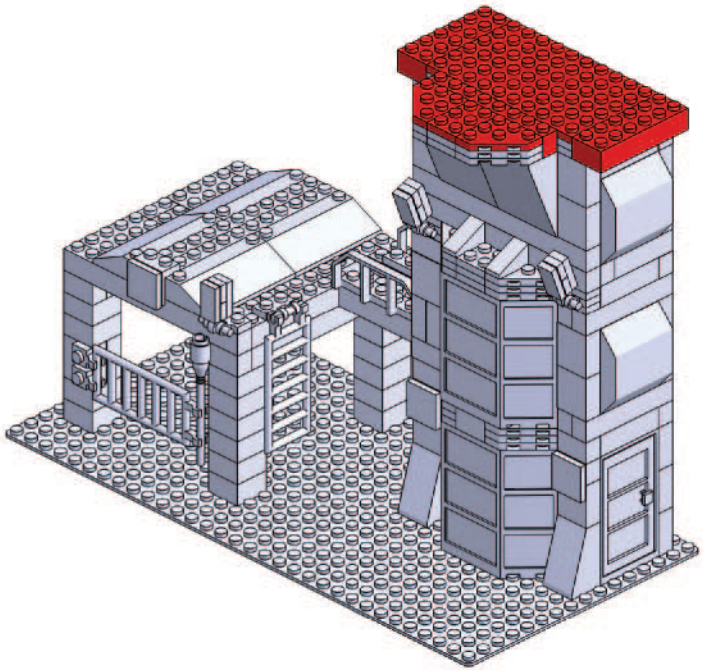

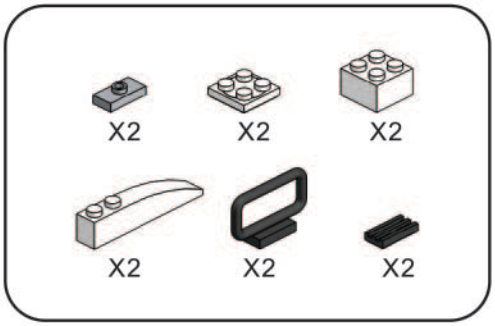

17

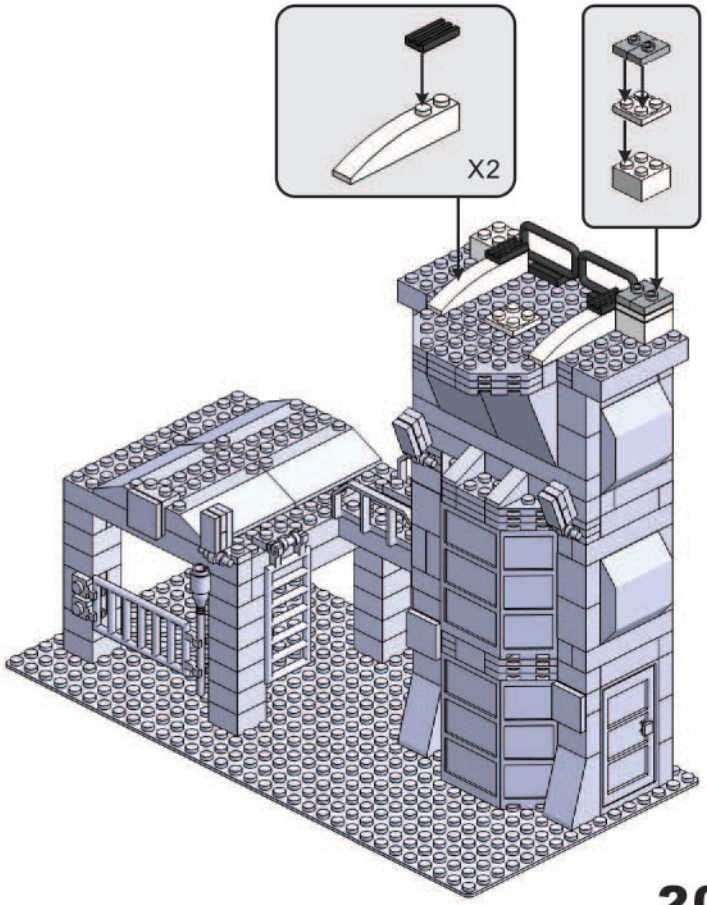

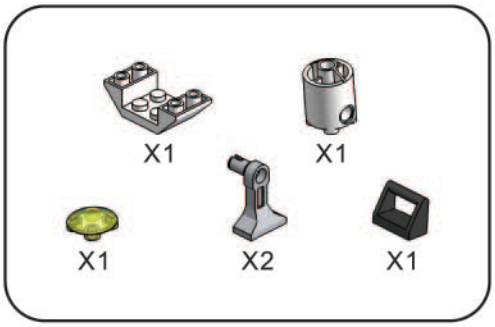

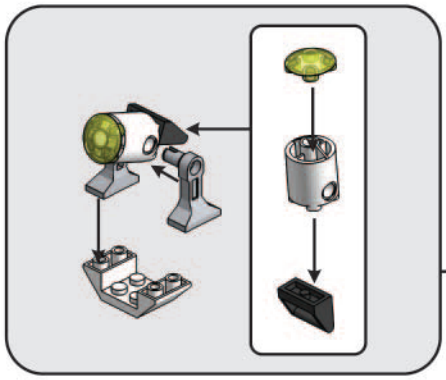

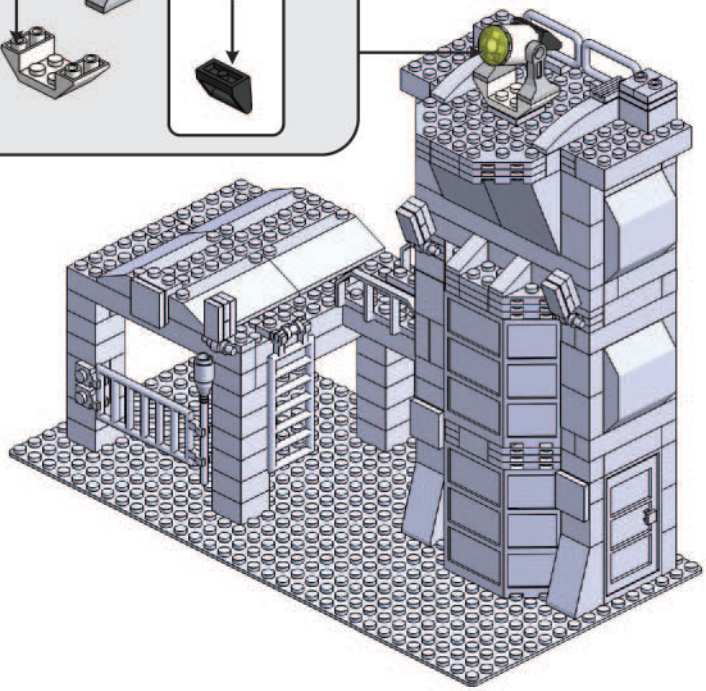

18

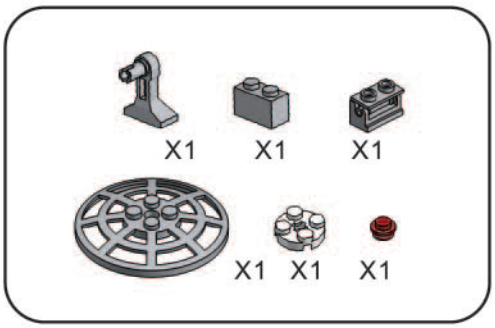

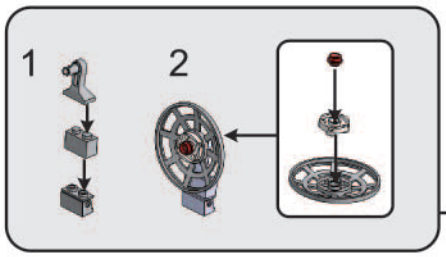

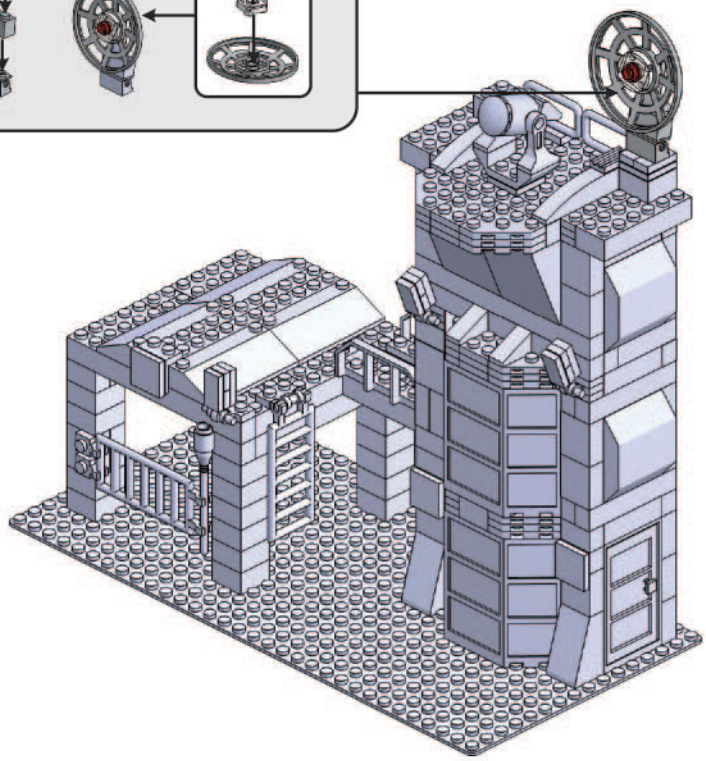

19

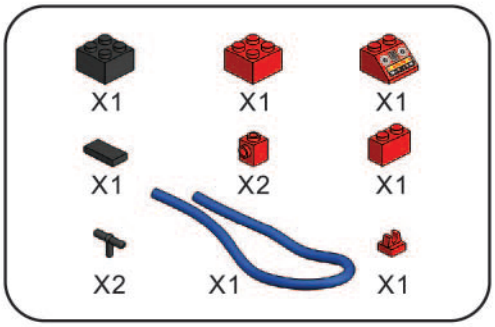
X1
X1
X1
X1
X2
X1
X2
X1
X1

20

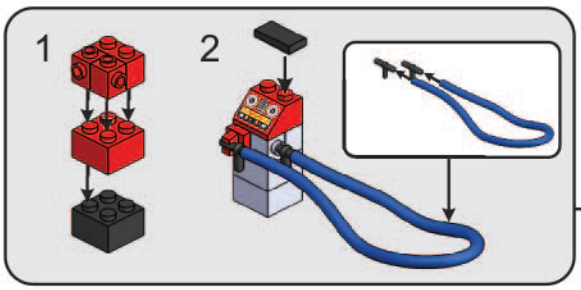
1
2

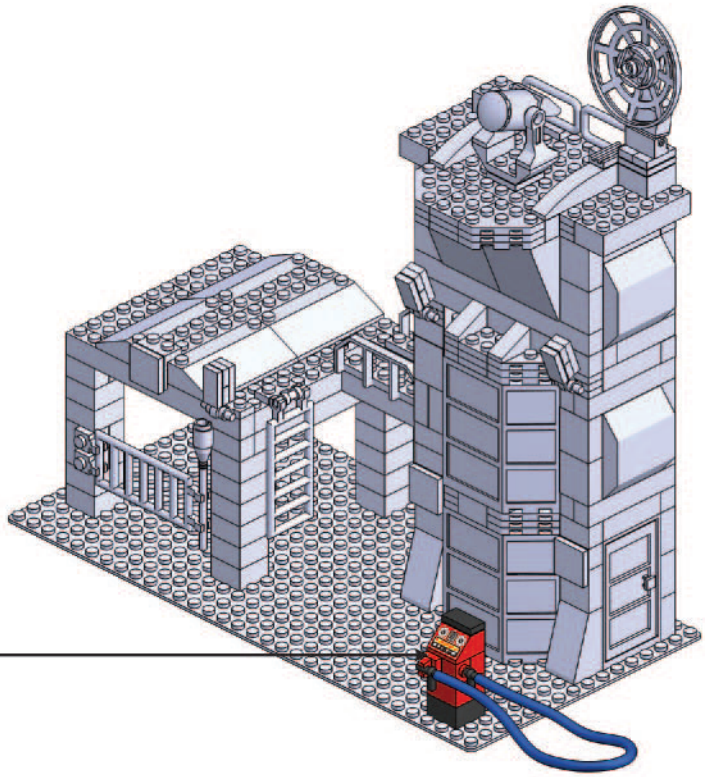

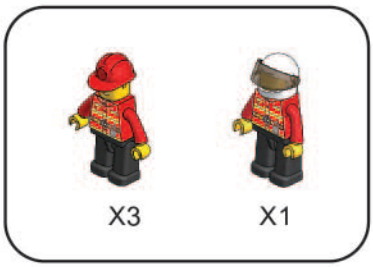
X3
X1

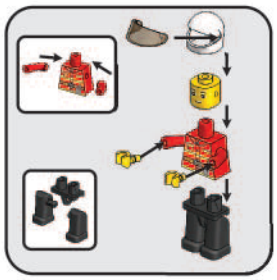

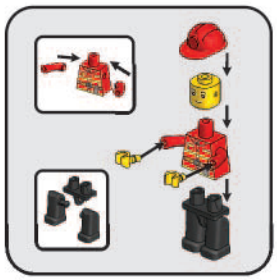

21

HELICOPTER
HELICOPTER
FIRE FIGHTING
FIRE & FIGHTING
STOP

ALSO AVAILABLE / AUSSI DISPONIBLES :

Police Station / Poste de police

Pirate Ship / Navire Pirate

MANY MORE TO COME!
PLUSIEURS AUTRES À VENIR !

DRAGONBLOK.COM

Manufactured for / Manufacturé pour : Shantou VeryFun Toys & Nursery Co.,Ltd.
© 2014 Wange
All rights reserved / Tous droits réservés.
www.wangetoys.com

Distributed By / Distribué par :
IMPORTS DRAGON®
2515, de la Renaissance,
Boisbriand, Québec,
Canada J7H 1T9
www.importsdragon.com

MADE IN CHINA/FABRIQUÉ EN CHINE